DOMETIC

WINDOWS, DOORS & LIGHTS
OTHER

DRS

EN **Dust Reduction System**
Installation and Operating Manual

Original instructions

Please read this instruction manual carefully before installation and first use, and store it in a safe place. If you pass on the product to another person, hand over this instruction manual along with it.

Table of contents

1 Explanation of symbols 3
2 Safety instructions 4
3 Scope of delivery 5
4 Intended use 6
5 Technical description 6
6 Installation 9
7 Regular maintenance 16
8 Warranty 20
9 Disposal 21
10 Technical data 21

1 Explanation of symbols

WARNING!
Safety instruction: Indicates a hazardous situation that, if not avoided, could result in death or serious injury.

CAUTION!
Safety instruction: Indicates a hazardous situation that, if not avoided, could result in minor or moderate injury.

NOTICE!
Indicates a situation that, if not avoided, can result in property damage.

NOTE
Supplementary information for operating the product.

2 Safety instructions

The manufacturer accepts no liability for damage in the following cases:

- Damage to the product resulting from mechanical influences
- Alterations to the product without express permission from the manufacturer
- Use for purposes other than those described in the operating manual

In particular, the manufacturer will not be liable for any consequential damage, especially consequential damage caused by failure of the roof air conditioner.

2.1 General safety

WARNING!

- Only use the device as intended.
- Do not make any alterations or conversions to the device.

CAUTION!

- The dust reduction system must be installed securely so that it cannot fall down.
- Do not insert any foreign objects into the device.

NOTICE!

- Never drive through automatic car washes when the dust reduction system is mounted.
- Please ask your vehicle manufacturer if a technical inspection is required after fitting the dust reduction system and whether the height entered in your vehicle documents needs to be altered.

3 Scope of delivery

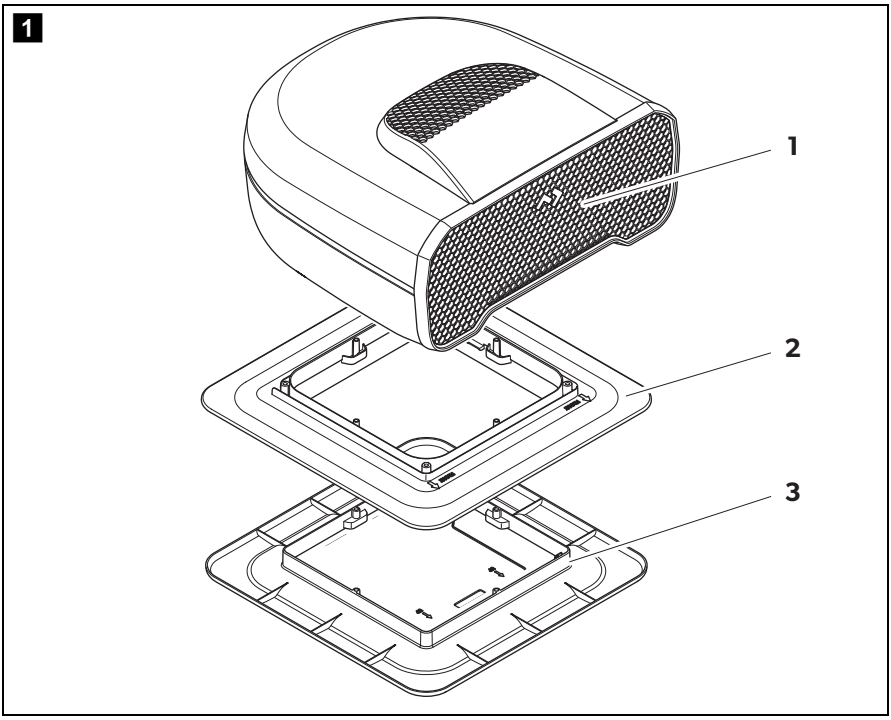

Item in fig. 1, page 5	Quantity	Explanation
1	1	DRS assembly
2	1	Top roof flange
3	1	Bottom ceiling flange with ceiling cover and blocking plate
	4	10G x 80 mm self-tapping screws
	4	10G x 60 mm self-tapping screws
	4	10G x 34 mm self-tapping screws
	16	10 mm long spacer
	4	5 mm long spacer
	1	Main filter
	1	Self-adhesive roof seal

4 Intended use

The Dust Reduction System (DRS) is designed for installation on the roof of towed vehicles such as caravans, camper trailers and horse floats. It is intended for vehicles with roof thicknesses of 30 to 65 mm.

The DRS reduces dust ingress while driving by pressurising the vehicle with filtered air. Additionally it provides ventilation while stationary when air flow passes through a secondary air path.

The DRS is **not** suitable for installation in construction machines, agricultural machines or similar equipment. It will not work properly if exposed to strong vibrations.

The DRS is **not** recommended for motorhomes due to the airflow noise through the DRS while driving.

5 Technical description

The DRS has been designed for use on caravans and camper trailers to provide filtered air entry into the vehicle to pressurise the interior and avoid dirty air being sucked in from other sources. The DRS can also be installed on horse floats to provide a source of clean, filtered air for horses.

The DRS works from vehicle speeds of 25 km/h and above. The DRS is assisted by airflow so it becomes more effective with increased vehicle speed.
Winds can affect the operation of the DRS, particularly driving in a tail-wind.

NOTE

- Some dust can still enter the caravan momentarily when there are changes in wind direction, low vehicle speeds and human traffic in and out of the vehicle.
- The DRS is designed to filter the air, even when driving behind another vehicle in a trail of airborne dust, but dust entry is best minimized by avoiding this condition, where possible. It is best to travel a distance behind to minimize driving in the dust cloud.

The DRS can separate and remove water from the incoming air. While driving in heavy rain, the majority of water is directed to outlets on the DRS. In extremely heavy and prolonged rain, some level of water should be expected to reach the filter where it is held in the filter holder to evaporate. No additional care or steps need to be taken in these conditions.

5.1 Ventilation while stationary

NOTE

- Ensure that the blocker plate is removed prior to travel, otherwise the DRS will not function to reduce dust entry.
- Cross-flow ventilation is still maintained with the blocker plate fitted.
- Do not block any openings around or inside the DRS. All air paths (excluding the main filter) are required for free ventilation.

The DRS provides 150 cm^2 of passive ventilation via a secondary air path through the ventilation filter and foam (fig. **2** 1, page 7). It bypasses the main filter (fig. **2** 2, page 7) when the vehicle is stationary only. This is required to maintain fresh air exchange. A small amount of airflow around the vent may be noticeable.

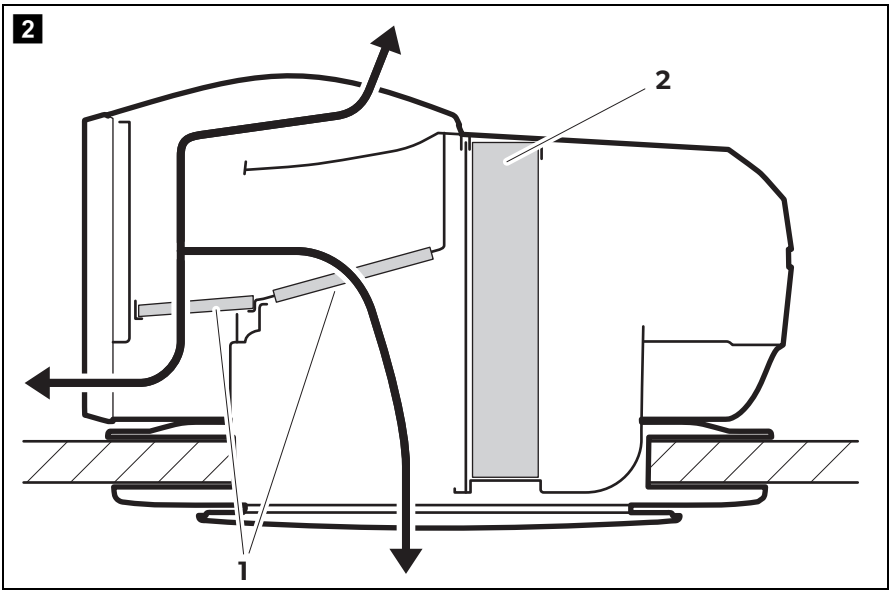

If the main air path into the DRS through the filter needs to be blocked for any reason, the blocker plate is designed to slide into a groove in front of the main filter and rest on the locating tab shown (fig. **3**, page 8):

➤ To fit the blocker plate, open the interior ceiling cover by pulling on the edge marked “PULL HERE TO OPEN”.

➤ Remove blocker plate from the ceiling cover, which is held by magnetic strips.

➤ Insert the blocker plate upwards.

➤ Close the interior ceiling cover by rotating the cover upwards and pushing gently until the magnets engage to hold the cover closed.

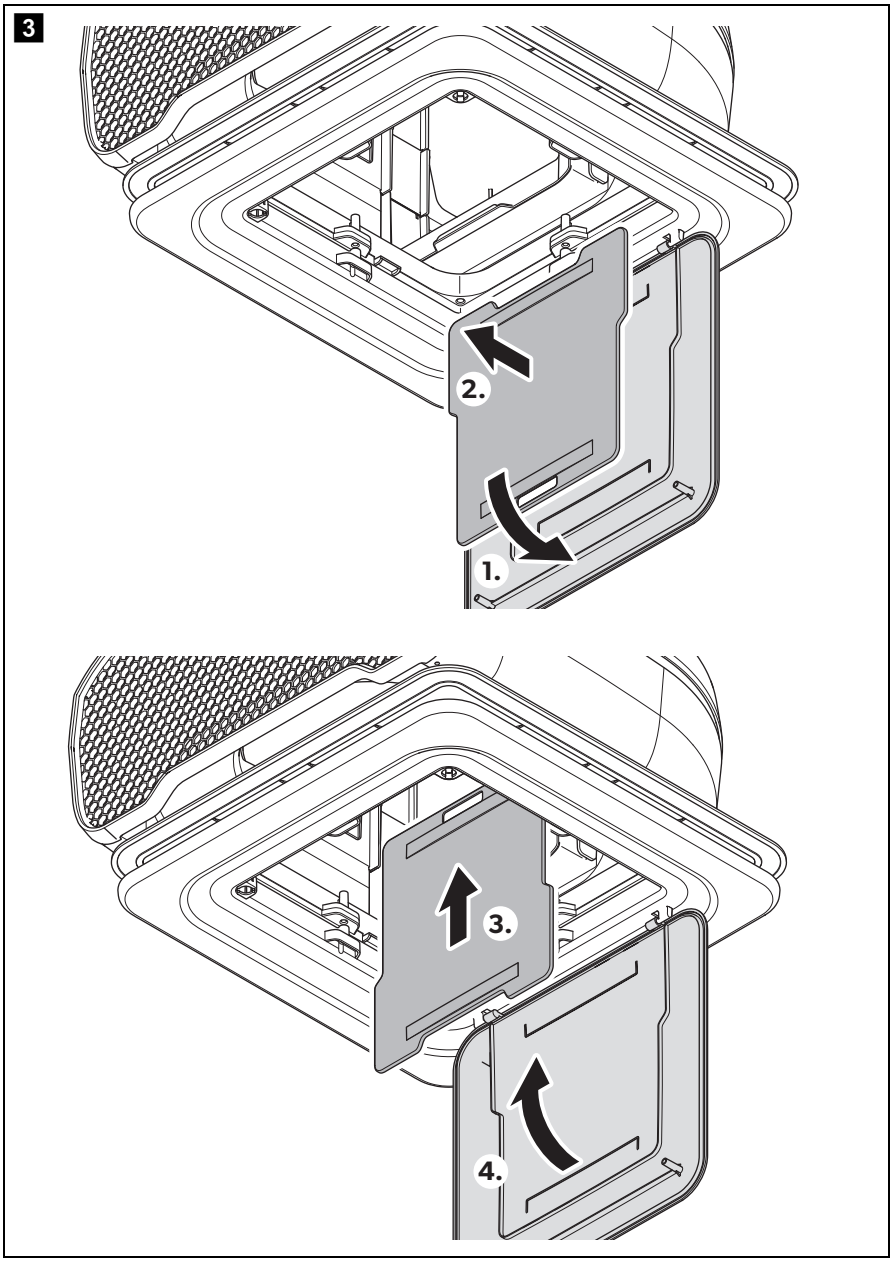

6 Installation

6.1 Notes on installation

CAUTION! Beware of injury

- Improper installation of the DRS can result in irreparable damage to the device and put the safety of the user at risk.
- The manufacturer assumes no liability for malfunctions and for the safety of the DRS, especially for injury and/or damage to property, if the DRS is not fitted in accordance with these installation instructions.

NOTICE! Beware of damage

- Observe the structural engineering of the vehicle and seal off all openings made when installing the DRS.
- Check whether the roof of the vehicle is able to support the weight of a person before climbing onto it. Ask the vehicle manufacturer about the permissible roof loads.

NOTE

- The entire front inlet (large hex grille) of the DRS must be unobstructed for the full length of the roof in front of the DRS.
- There should be a minimum of 20 mm clearance to other objects (e.g. solar panels, air conditioners) all around the DRS.

- Compatible with roof thickness from 30 mm to 65 mm, opening size from 285 x 285 mm to 400 x 400 mm.
- If the roof thickness is less than 40 mm, the 10G x 80 mm self-tapping screws need to be replaced with 10G x 60 mm screws.
- Add wooden battens to form a frame.
- Mounting position on the roof – front of caravan – is optimal
- Make sure the DRS is mounted in a position with unobstructed airflow (no objects in front of the DRS such as air conditioners, solar panels or antennas)(fig. **4**, page 10, fig. **5**, page 10).

Recommended mounting location for caravans

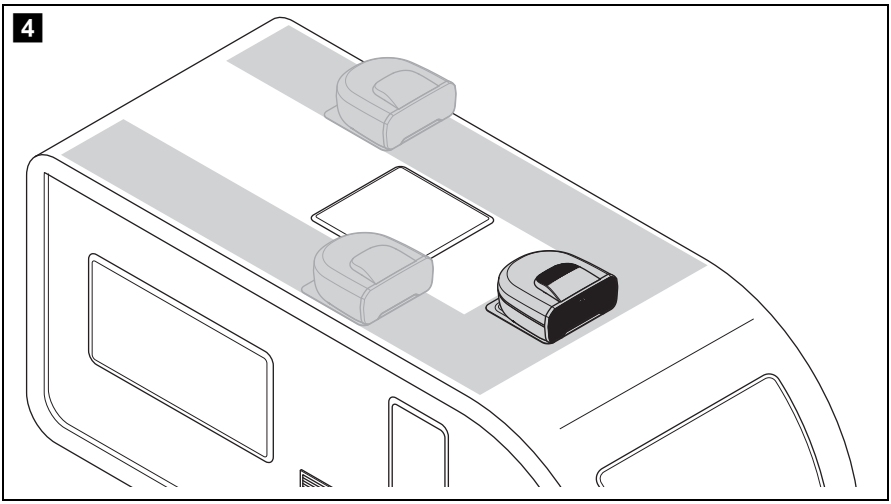

Recommended mounting location for pop-top caravans

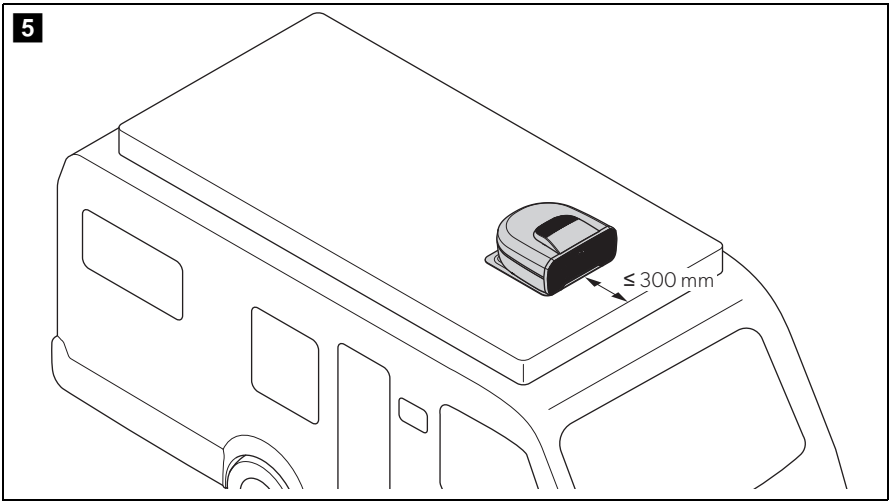

6.2 Installing the DRS

There are two ways of installing the system:

- Making a new opening (chapter "Making a new opening" on page 11). In this case the opening must be reinforced by an appropriate frame.
- Using the existing roof hatch openings in the vehicle (chapter "Installing in an existing opening" on page 12).

Making a new opening

➤ Select an area on the roof between two longitudinal supports.

➤ Mark the position and size of the opening. A 285 x 285 mm opening is recommended but can be as large as 400 x 400 mm.

➤ Drill out the corners (**A**).

➤ Carefully cut out the opening on the roof using a jigsaw or a similar tool (**B**).

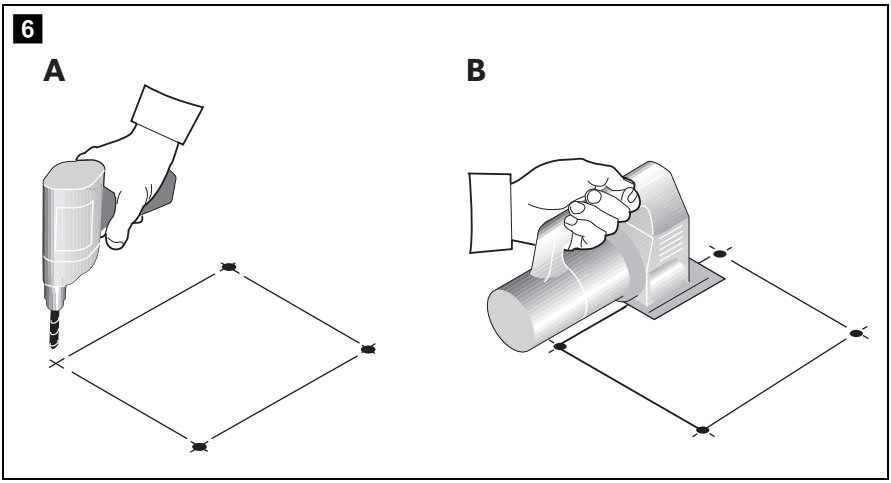

➤ Make sure no electrical power cables are damaged.

➤ Before installation, check whether the roof hole needs reinforcing.

➤ Use battens to create a frame around the cutout made in the roof.

➤ If needed, remove the insulation foam according to the width of your reinforcing battens (not in scope of delivery).

➤ Fit the reinforcing battens.

Installing in an existing opening

➤ Remove the backing paper of the self adhesive foam seal and fit onto the bottom surface of the top roof flange. There is a slight recess on the outer perimeter for the foam to be located. The foam seal will easily stretch to bend around the corners while staying flat:

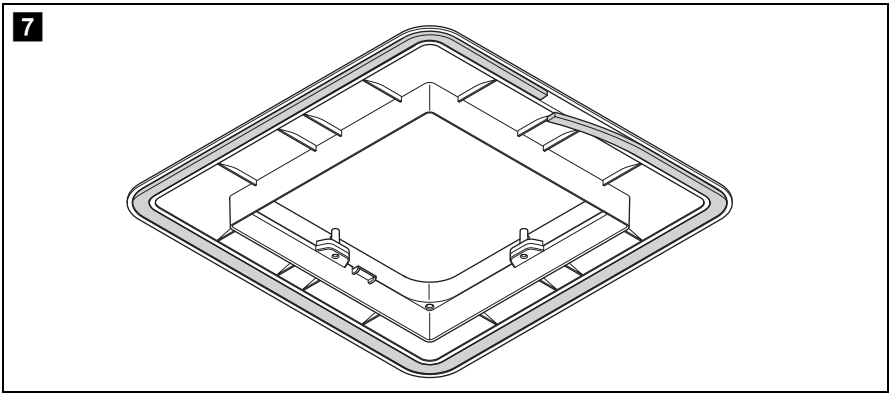

➤ Ensure the arrows on the top surface are pointing to the front of the caravan.

➤ Position the top roof flange centrally within the opening and mark the two rear corners on the roof.

➤ Remove the top roof flange and screw onto the DRS assembly in the four corners using the 10G x 34 mm screws and tighten to a torque of 15 Nm:

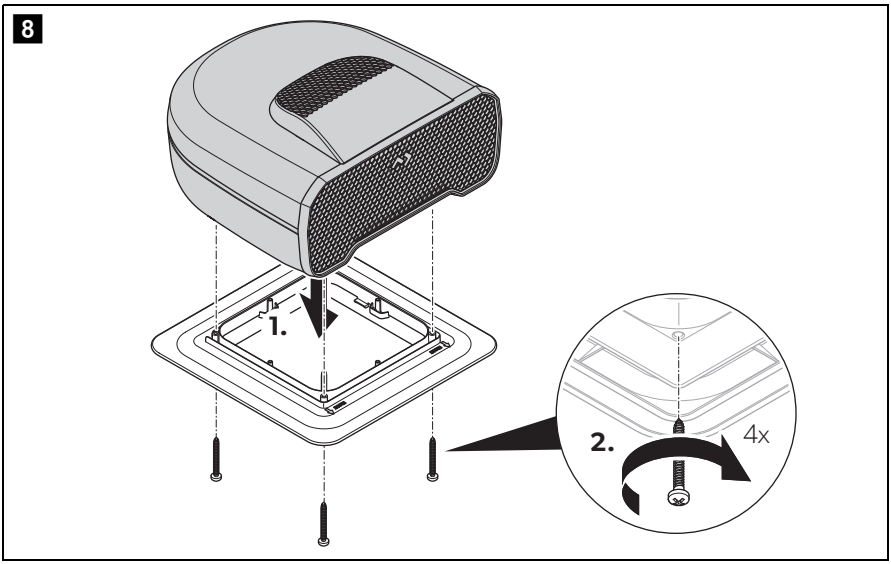

➤ Fit the top roof flange with the DRS assembly to the centre of the opening and seal using silicone adhesive around the perimeter. It is permitted to apply silicone over the seal as this will not affect the seal function and will improve sealing.

➤ Place the DRS assembly onto the top roof flange on the caravan roof:

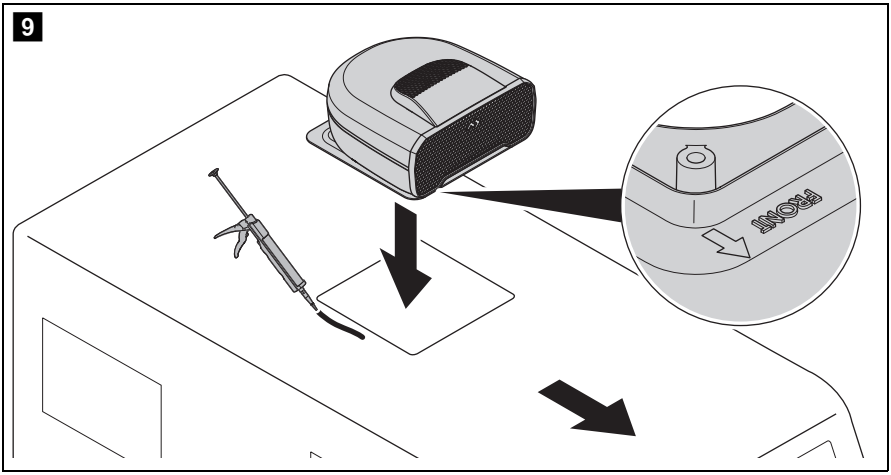

➤ Before fitting the bottom roof flange, choose the most suitable orientation for the hinged cover for easy access (hinges can face either the front or rear of the caravan).

➤ From inside the caravan, check the spacer length required by holding the bottom roof flange in place and measuring the distance between the bottom roof flange and top roof flange screw boss. Choose the combination of 10 mm and/or 5 mm spacers so that the total length of the stacked spacers is 5 mm shorter than the gap. This is to ensure the bottom roof flange and top roof flange deform sufficiently to clamp on the roof.

Fitment of bottom roof flange

Roof thickness (mm)	Screw 10G x 60 mm	Screw 10G x 80 mm	Spacer length (mm)
30	x		5
35	x		10
40	x (recommended)	x	15
45	x (recommended)	x	20
50		x	25
55		x	30
60		x	35
65		x	40

➤ Fit the 10G x 80 mm screws (or 10G x 60 mm screws if the roof thickness is 45 mm or less) through the holes in the bottom roof flange and slide the spacer over the protruding part of the screw so that the spacer will be fitted between the bottom roof flange and the top roof flange:

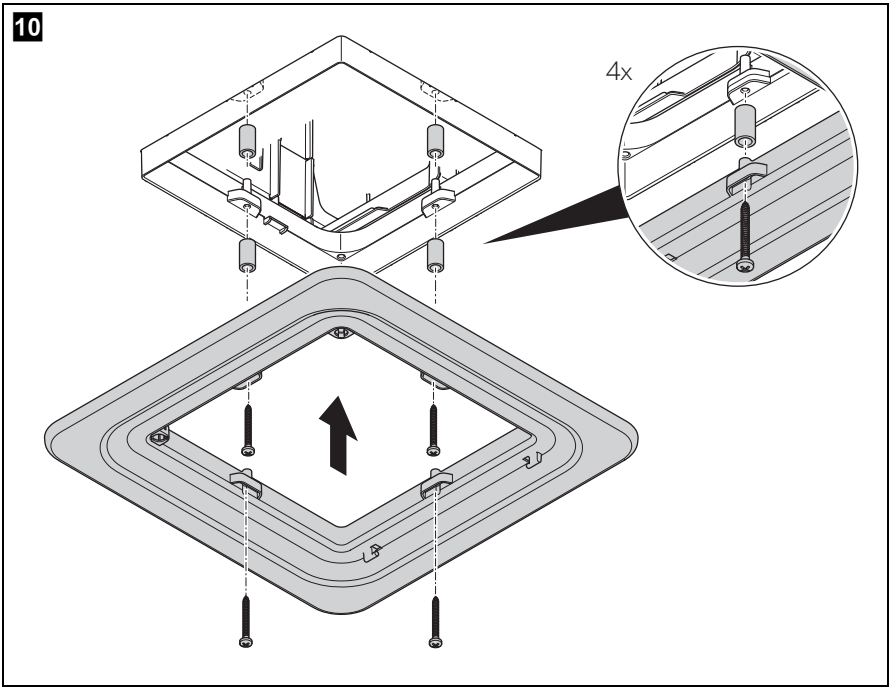

➤ Tighten the screws so that the joint can clamp down on the sleeve.

➤ Continue tightening the screws until there is no gap between the sleeve and the top and bottom roof flange.

➤ Ensure the joint has not overly deformed and caused gaps between the bottom roof flange and ceiling. If this occurs, increase the total length of the sleeves by 5 mm, or unscrew by half a turn.

If there is no deformation (sleeves too long) then there will be insufficient clamping of the joint and the sleeves should be shortened by 5 mm by choosing a different combination of 10 mm and 5 mm long sleeves.

➤ Ensure the filter is inserted into the filter holder, and the filter holder inserted into the DRS.

➤ Close the ceiling cover:

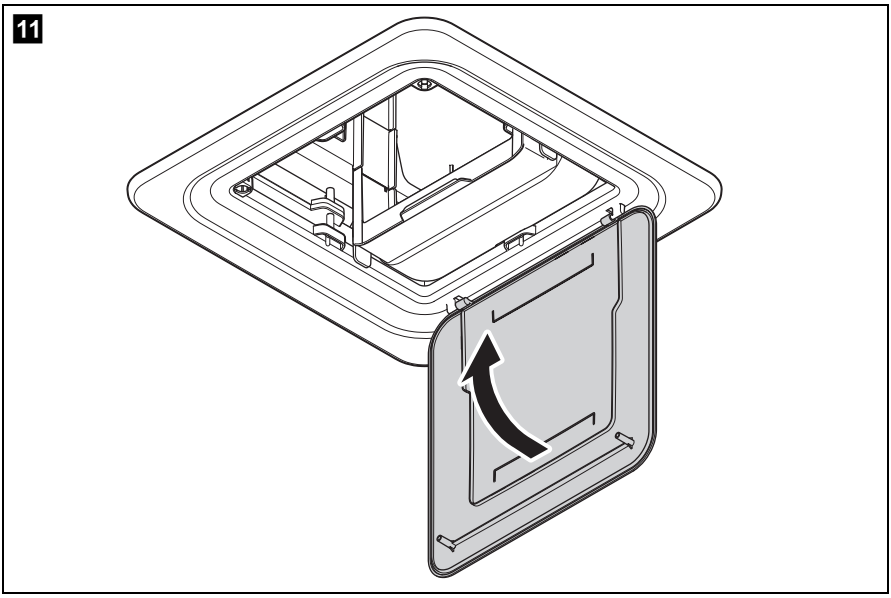

✓ The installation is complete.

7 Regular maintenance

7.1 Changing the main filter

To change or inspect the filter proceed as follows:

➤ Open the interior ceiling cover. The ceiling cover is hinged on one side and held closed by magnets on the opposite side.

➤ Open the cover by pulling down on the side marked "PULL HERE TO OPEN".

➤ Remove the filter holder by pushing the two tabs inwards and pulling down on the filter holder gently (fig. 12, page 16):

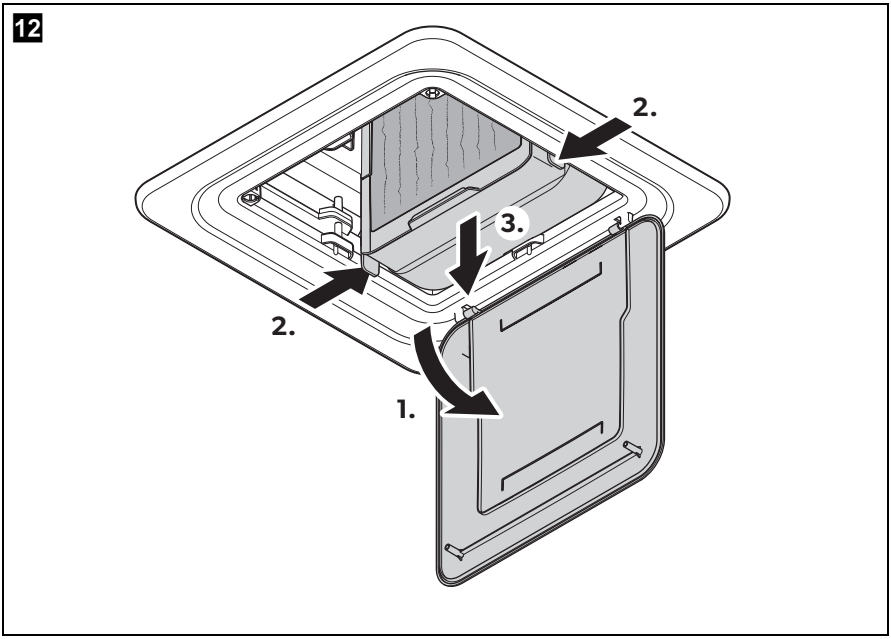

The filter can be slid out of the filter holder.

The time for the filter to reach full capacity can vary greatly based on the road conditions:

Driving condition	Filter inspection interval	Filter replacement interval
Sealed roads	2000 km	10,000 km
Dusty roads	1000 km	5000 km
Following another vehicle on extremely dusty roads	300 km	1000 km

Filter inspection:

➤ Check the colour for indication of amount of dust accumulated.

➤ If necessary, remove filter and tap lightly to remove excess dust.

Replace filter if there are signs of damage (filter media becomes furry or separates):

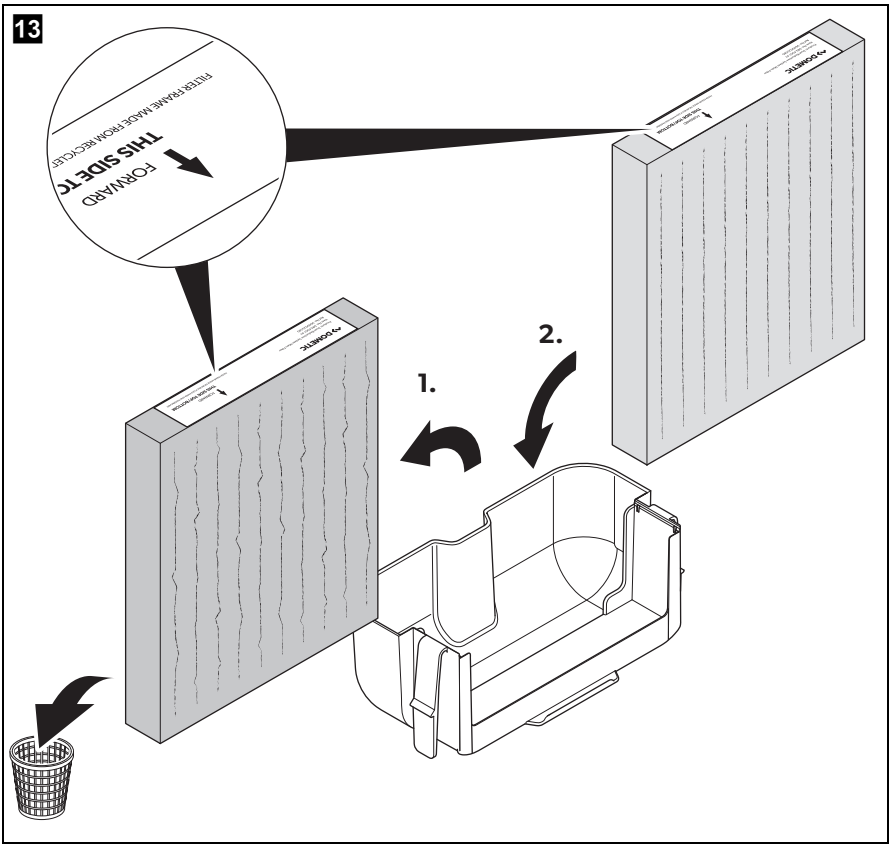

When replacing, ensure that the filter is slid back into the filter holder with the arrow on the filter pointing to the front of the caravan and the pleats are vertical (fig. 14, page 18):

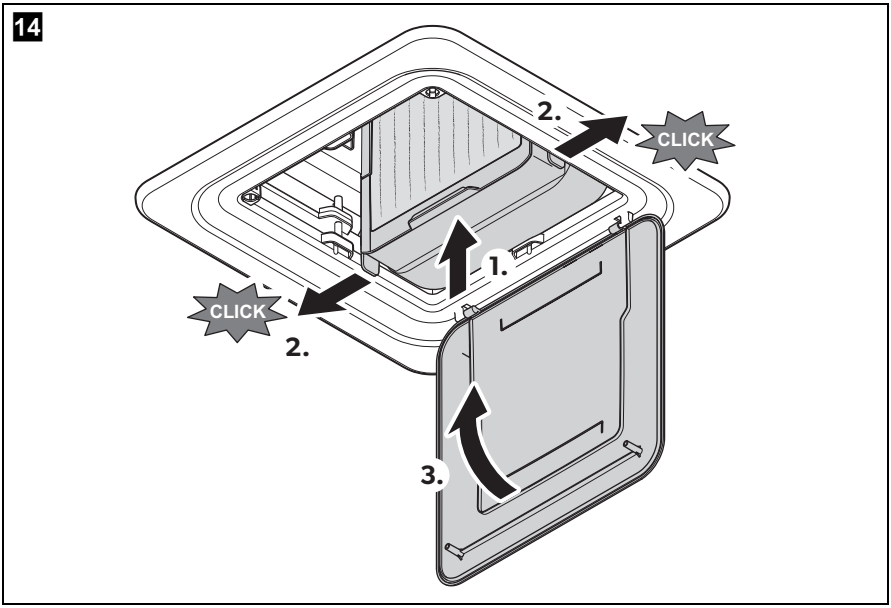

7.2 Cleaning debris inside of the DRS

After a long period of time, the DRS may accumulate some dust and debris. Any debris in the filter or filter holder can be removed by following the steps in chapter "Changing the main filter" on page 16. If debris are located between the front grille and the filter (main compartment), access to the rear of the cavity can be gained by removing the main filter or the ventilation filter frame. If greater access is required, the DRS can be easily removed from the roof by following the installation steps in reversed order.

7.3 Cleaning the ventilation filter foam

The foam should be checked regularly for build up of dust. If dust is present, the foam will be discoloured and should be rinsed in water and dried.

➤ Cleaning the foam is important to maintain ventilation in the caravan from harmful gases. The foam should be checked at least every 6 months or more frequently if travelling in very dusty conditions (the check interval should match the interval recommended for the main filter).

➤ Remove the frame by pushing the two tabs outwards and pulling down gently (fig. 15, page 19):

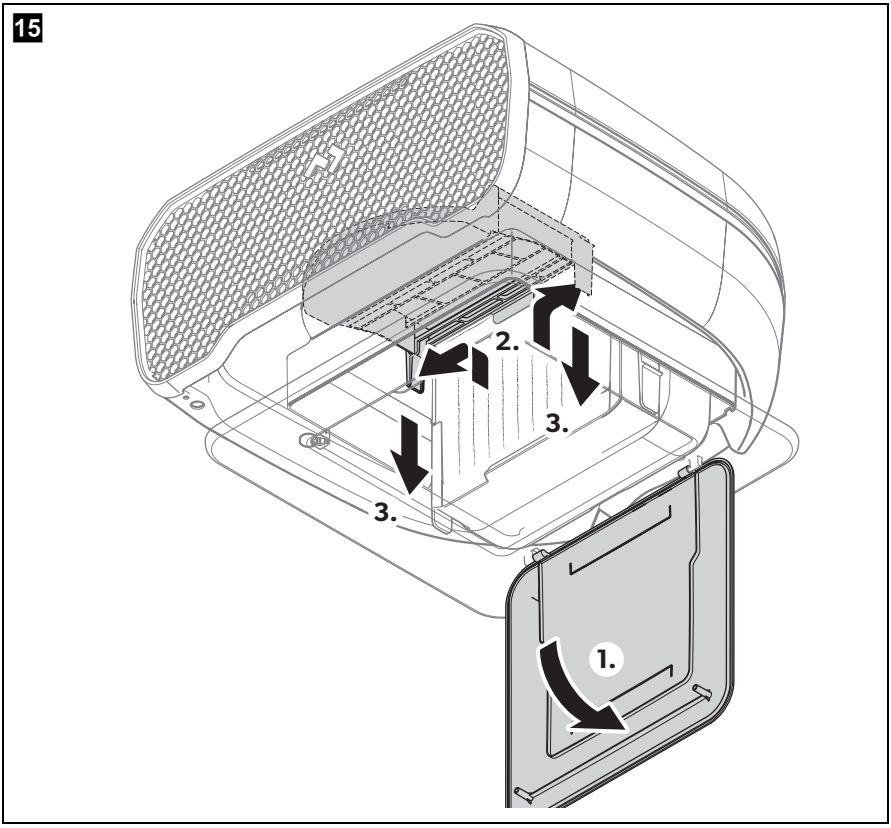

➤ Rinse the foam in water to clean any dust. The foam inserts are removable and replaceable if required (fig. 16, page 20):

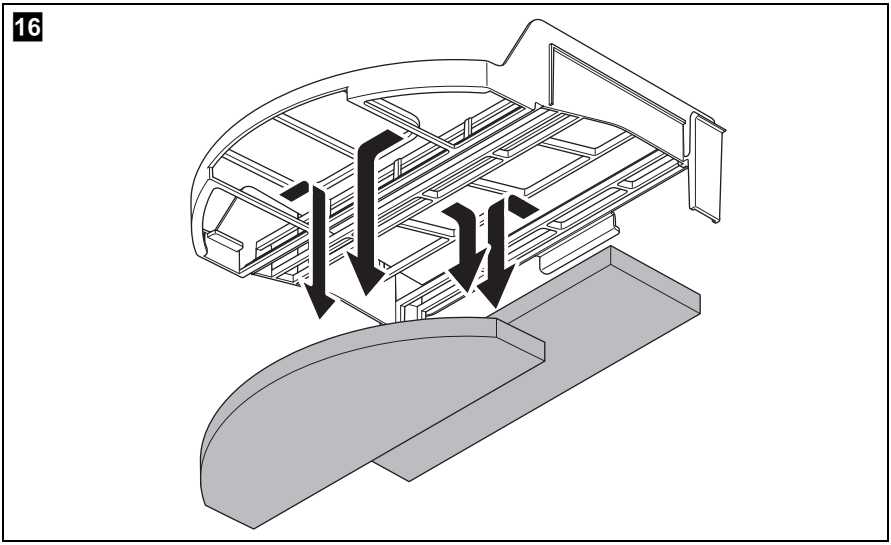

➤ To re-insert the frame, angle the top of the frame upwards and insert into the space so that the cross-brace of the frame is resting on the housing.

➤ Angle the rear edge upwards until the clip is pushed fully upwards.

8 Warranty

The warranty period is two years. If the product is defective, please contact the service partner.

Our experts will be happy to help you and will discuss the warranty process with you in more detail.

9 Disposal

➤ If possible, dispose of the packaging material in the appropriate recycling container.

➤ If you wish to finally dispose of the product, ask your local recycling centre or specialist dealer for details about how to do this in accordance with the applicable disposal regulations.

10 Technical data

	DRS
SKU Dust Reduction System:	9600025579
SKU main dust filter:	9600025580
Dimensions L x W x H:	see fig. 17, page 22 and fig. 18, page 23
Weight:	4.2 kg

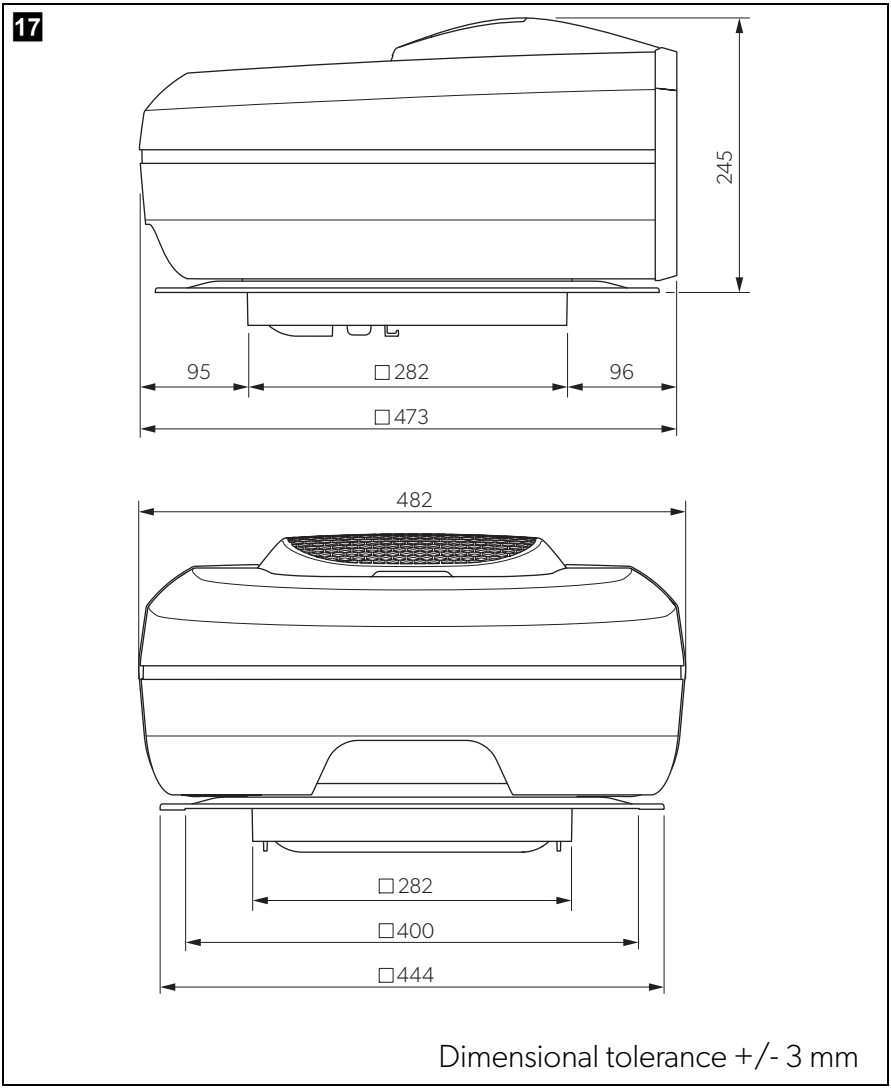
17
245
95
□282
96
□473
482
□282
□400
□444
Dimensional tolerance +/- 3 mm

18

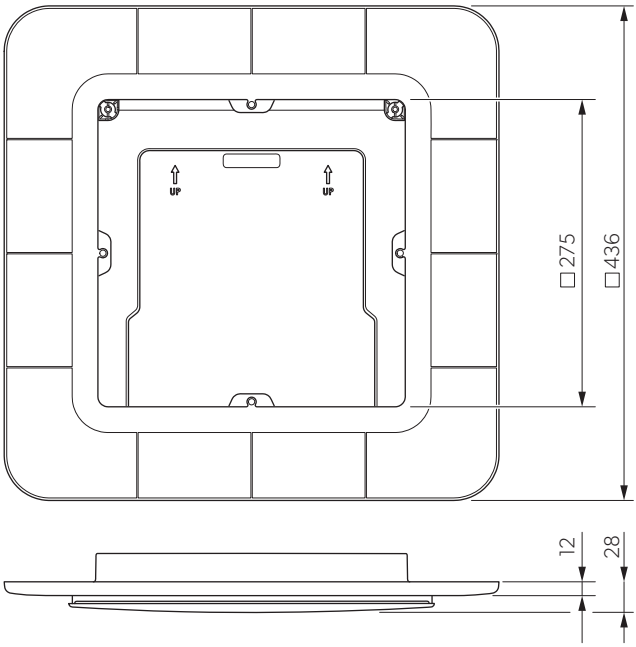

Dimensional tolerance +/- 3 mm

Mobile living made easy.

DOMETIC

dometic.com

YOUR LOCAL DEALER

dometic.com/dealer

YOUR LOCAL SUPPORT

dometic.com/contact

YOUR LOCAL SALES OFFICE

dometic.com/sales-offices

4445102874 08/2019

A complete list of Dometic companies, which comprise the Dometic Group, can be found in the public filings of:
DOMETIC GROUP AB Hemvärnsgatan 15 SE-17154 Solna Sweden