CRUISEMASTER™

ATX

PREMIUM ALL-TERRAIN SUSPENSION SYSTEM

AIR / COIL

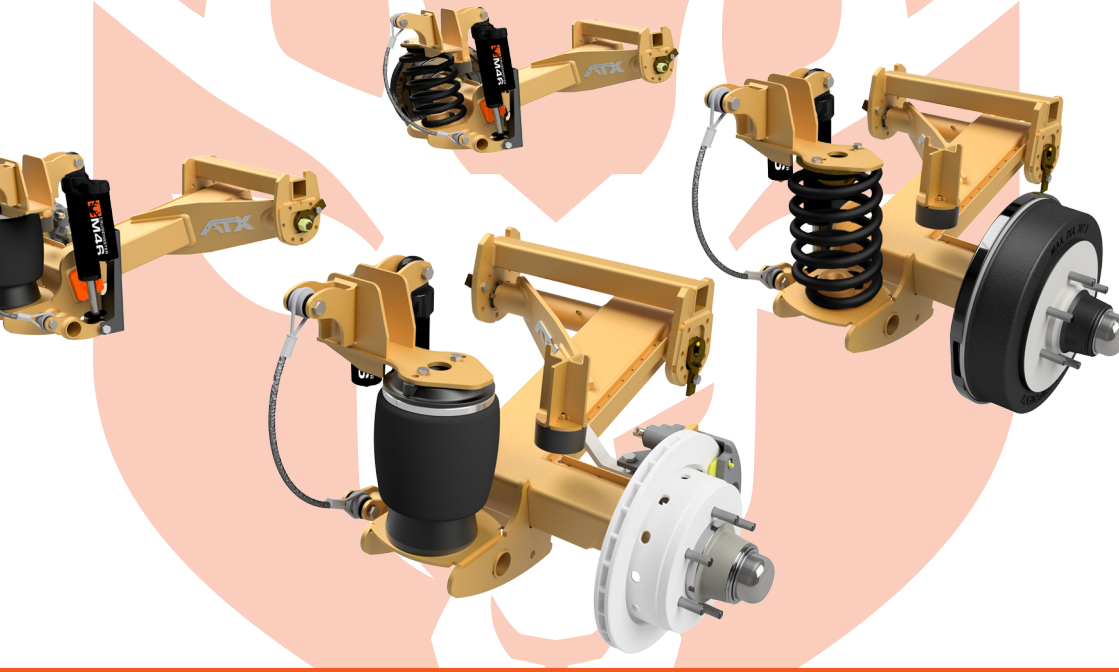

MAINTENANCE • WARRANTY • SERVICING • ACCESSORIES

CRUISEMASTER.COM.AU

@CRUISEMASTERCOUNTRY

A MESSAGE FROM CRUISEMASTER™

You are now the proud owner of a Cruisemaster™ ATX suspension system. This is our premium system and is unmatched in the industry.

This suspension system has been designed, tested and manufactured in Australia by Cruisemaster™, Australia's leader in all-terrain towing technology.

Cruisemaster has been an industry icon for over 40 year's supplying quality suspension systems and couplings into the caravan, camper and trailer markets.

Enjoy the adventures ahead!

CRUISEMASTER™

WARRANTY

Cruisemaster™ has a proud history of engineering and real world testing, this has made Cruisemaster™ the trusted leader in the industry when it comes to products being designed to last.

To support you in your adventures this product comes standard with a 3 year warranty. We also offer a complimentary 2 year warranty extension when registering your product online; giving you 5 years of cover.

To apply for the extended warranty and view our warranty documents in full visit www.cruisemaster.com.au/warranty-policy/.

Please Note: Brake components included with this suspension are limited to a 12 month warranty period as outlined in the Cruisemaster™ warranty document.

If something does go wrong, warranty claims and support can be lodged online or via our customer service centre.

When lodging a warranty claim you will be asked for the suspension "ID" as presented on the Cruisemaster™ ID Plate supplied with every suspension system.

Call 07 3624 3800
Email warranty@cruisemaster.com.au
www.cruisemaster.com.au/warranty-policy/

5 YEAR CRUISEMASTER™ WARRANTY
3 YRS STD + 2 YRS FREE ONLINE EXTENSION - T&C'S APPLY

SUSPENSION FEATURES

Cruisemaster™ ATX was developed to take caravan and trailer suspension to the next level. The Cruisemaster engineering team put together their ultimate wish list in development of this suspension, meaning you only get the best on Cruisemaster™ ATX.

Featureing a 63mm stub axle, lockable toe and camber adjustment, off-road racing spec'ed remote res. shock absorberand many more industry leading features.

* *Given the number of system options available, the suspension system fitted to your caravan or trailer may differ from the image provided below.*

* *A "single Axle" configuration conisists of two suspension arms, for a "Tandem Axle" configuration four arms are included in the kit.*

LEGEND

1. Shock Absorber Mounts & Bolts
2. Rolling Sleave Airbag (2a) or Coil Spring (2b)
3. M46 Remote Res. Monotube Shock Absorbers
4. Extra Heavy Duty ATX Arm
5. Cable Tray
6. Greasable Hinge & Bushes
7. Bump Stop
8. Jacking Point
9. Lockable Toe (9a) & Camber (9b) Adjusters
10. Extra Heavy Duty 63mm Stub Axle
11. Electric Drum (11a) or Ventilated Disc Brakes (11b)
12. Japanese Bearings and Automotive Grade Seals
13. Drum Spigot
14. Rebound Cable

OPTIONAL EXTRA'S NOT SHOWN

- Air Control System (Air Only)
- Anti Roll Bar

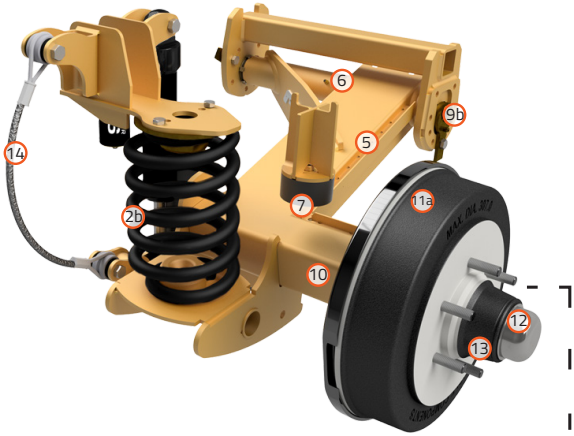

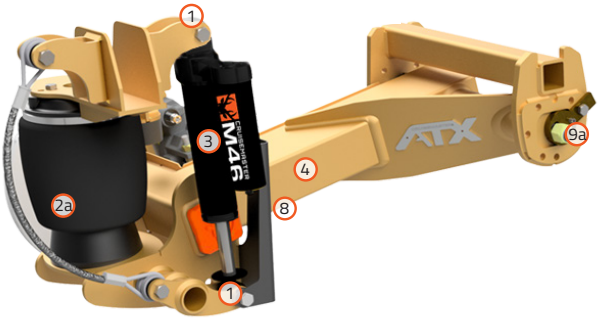

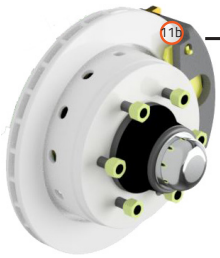

QUICK GUIDE - SPARE / REPLACEMENT PARTS

1. REPLACEMENT ARM (Single Arm)
Description: XT Base Frame Kit
Part Number (Start of Code Only): 33ATX-S...

2. DRUM (Single Unit)
Description: 12" VC Drum (Stud Pattern & Spigot will vary)
Part Number (Start of Code Only): 03-12VC...

3. BEARING KIT (Single Arm)
Description: VC Bearing suited to 12" Drums/hubs (Incl. Bearings, Seals, Cap, Split Pin)
Part Number: 10-VC
Inner: 82.93 x 44.45 x 23.8 Outer: 59.13 x 35 x 15.87 Seal: 85.73 x 57.15 x 12.7 Dust Cap ID: 63mm Split Pin: 5 x 50

4. ELECTRIC BRAKE BACKING PLATE ASSEMBLY (Single: Left or Right)
Description: 12" Cruisemaster™ A/T full Backing Plate Assembly
Part Number: 05-3076-L (Left) / 05-3076-R (Right)
12" Magnet Only: 53-12-MAGNET-KIT
12" Shoes Only: 53-12-SHOE-LINING-KIT
** Dexter branded backing plates & spares also available.*

5. SHOCK ABSORBER (Single Unit)
Description: M46 Shock Absorber
Part Number: 33J-6000

6. SHOCK ABSORBER BOLT KIT (Services 2 x shocks)
Description: Single Axle Shock Configuration (Type 5)
Part Number: 33C-020

7a. COIL SPRING (Single Arm) / 4 SIZES (Refer Coil Spring for markings)
Description: Suited to 2200Kg ATM Single
Part Number: 33SC-747A

Description: Suited to 2600Kg ATM Single
Part Number: 33SC-530A

Description: Suited to 2800Kg ATM Single
Part Number: 33SC-590A

Description: Suited to 3700Kg ATM Tandem
Part Number: 33SC-390C

Description: Suited to 4500Kg ATM Tandem
Part Number: 33SC-747A

7b. AIRBAG (Single Arm)
Description: Firestone Rolling Sleave Airbag
Part Number: 33SA-AB0044-V

8. REBOUND CABLE KIT
Description: 2 per kit, includes straps, bushes & mounting sleeves
Part Number: 33C-017

9. SHOCK GUARD KIT
Description: Includes left & right guards, bolt kit
Part Number: 33-022

QUICK GUIDE VISUAL REFERENCE (PRIMARY PARTS)

Additional spare and replacement parts are available on request. Please contact the Cruisemaster™ Customer Service Team for more information.

07 3624 3800
sales@cruisemaster.com.au

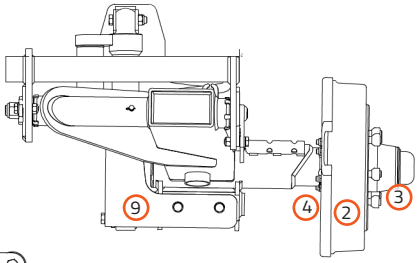

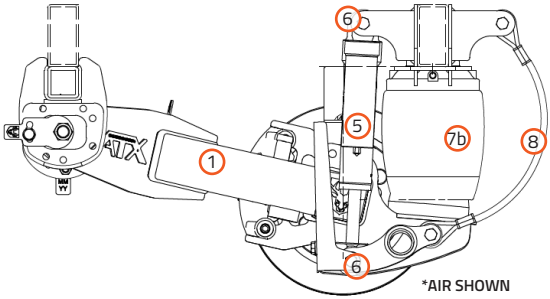

*AIR SHOWN

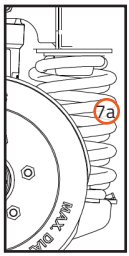

*COIL ALT.

QUICK GUIDE VISUAL REFERENCE TOOL (SMALL PARTS)

1. Description: HINGE BUSH D
   Part Number: 33S-707
2. Description: HINGE SLIDE WASHER
   Part Number: 33S-8042
3. Description: LOCKABLE ADJUSTER
   Part Number: 33S-8310
4. Description: HINGE SPINDLE
   Part Number: 33S-8300
5. Description: NUT 3/4 UNF NYLOC
   Part Number: 60-N-3/4-UNF-NYL
6. Description: BOLT HEX 8.8 M10X40 Z/P
   Part Number: 60-B-M10X40
7. Description: WASHER FLAT M10 Z/P
   Part Number: 60-WF-M10

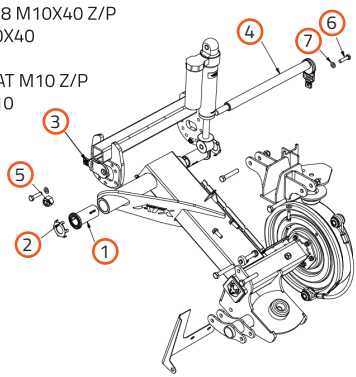

COMMON SPARES & TOOLS NOT SHOWN

RIDE HEIGHT INDICATOR PLATES (Pair)

Description: Visual Indicator for inside the Wheel Arch
Part Number: 33SA-RIDE-HEIGHT-INDICATORS

AIR SYSTEM EMERGENCY REPAIR KIT

Description: Tube, Connectors, Tube Cutter
Part Number: 33SA-060

UNIVERSAL TOE/CAMBER ADJUSTMENT TOOL

Description: Custom tool to assist with gripping Toe & Camber Adjusters
Part Number: 98-910

In our experience when travelling remote it is common practice to carry at a minimum;
"Bearing Kit"
"Shock Bolt Kit"
"Air System Emergency Repair Kit" (Air Only)

Cruisemaster™ also highly recommends carrying a torque wrench when travelling remote.
(Not available through Cruisemaster™)

MAINTENANCE SCHEDULE / SERVICING

This Cruisemaster™ suspension system has been designed to give a trouble free life with minimum maintenance. However, to ensure the safety and reliable operation of your suspension system the following routine maintenance must be carried out. The service periods recommended below are based on normal road usage. For off-road and abnormal conditions maintenance intervals will need to be more frequent and daily visual inspections are recommended. Maintenance should be carried out by a competent person.

The suspension fitted has been selected according to the vehicle manufacturers recommended Aggregate Trailer Mass (ATM) which can be found on the vehicles compliance plate. It is important that these figures are not exceeded.

NOTE: If your suspension is going off-road, or is experiencing rough terrain we strongly recommend that your suspension be serviced at intervals of 5,000km as a minimum.
Failure to properly maintain your suspension may void any manufacturer's warranty.

MAINTENANCE SCHEDULE	INITIAL CHECKS, at			SERVICE INTERVALS, every
	1st 100km	1st 300km	1st 1,000km	10,000km (or 12 monthly)
WHEEL NUTS TIGHTENED	✓	✓	✓	✓
TORQUE SUSPENSION & SHOCK MOUNTING BOLTS		✓	✓	✓
GREASE HINGE BUSHES			✓	✓
INSPECT BUSHES				✓
SHOCK ABSORBERS VISUAL INSPECTION				✓
WHEEL BEARINGS CHECK			✓	✓
WHEEL BEARING SERVICE				✓
CHECK BRAKE MOUNTING BOLTS FOR TIGHTNESS			✓	✓
BRAKE ADJUSTMENT & CHECK		✓	✓	✓
BRAKE SERVICE				✓
WHEEL ALIGNMENT			✓	✓

MAINTENANCE CHECKLIST / INSTRUCTIONS

WHEEL NUTS
Refer to "Drums / Hubs - Wheel Mounting & Studs" section for maintenance instructions.

BRAKES
Refer to "Brakes" section for maintenance instructions.

SUSPENSION & SHOCK ABSORBER MOUNTING BOLTS
Refer to "Torque Requirements" for specifications. Always use a torque wrench.

IMPORTANT: Always remember that the best method for retaining a nut on a bolt is by proper tightening.

GREASE HINGE BOLTS
Using grease gun, pump grease through grease nipples until it comes out around the bushes.

INSPECTION OF SUSPENSION BUSHES
Remove bushes, bolts, pins and spindles and inspect. Any parts showing signs of wear should be replaced. Smear a small amount of grease on bushes and outside of pins and spindles prior to reassembly. Torque all bolts in accordance with "Torque Requirements", ensuring that new Nylon Insert nuts are fitted where used.

SHOCK ABSORBERS
Visually inspect for leaks, if found leaking and within warranty period contact Cruisemaster™. If outside of warranty period replacement shocks are available online, over the counter or via a Cruisemaster™ NSN Member.

Check mounting bolts for tightness. Correct torque is critical for proper installation and trouble free service – Refer "Torque Requirements". When vehicle is rocked movement should stop within 3-4 applications.

Slight misting of oil on the exterior of the shock absorber is normal and does not indicate a fault. (as shown)

WHEEL BEARINGS
After first 1,000km: Check for excessive bearing play and adjust if necessary.
Every 6 months or 10,000km: Wheel bearings should be dismantled and inspected. Lubricate with Castrol LMX grease or equivalent and replace bearings if necessary.

WHEEL ALIGNMENT
Refer to "Wheel Alignment" section for maintenance instructions.

Watch how to inspect & adjust wheel bearings on YouTube: **CruisemasterClass - Ep 7**

TORQUE REQUIREMENTS

The torque figures quoted are applicable to fasteners in a clean and unlubricated condition, free from rust or corrosion. Correct pre-loading of the bolt resists the effects of fatigue. Providing that the bolt pre-load is greater than the applied load, the fatigue life of the bolt will be infinite. Always use a torque wrench.

** For wheel stud torques refer to drum/stud section*

IMPORTANT: Always remember that the best method for retaining a nut on a bolt is by proper tightening.

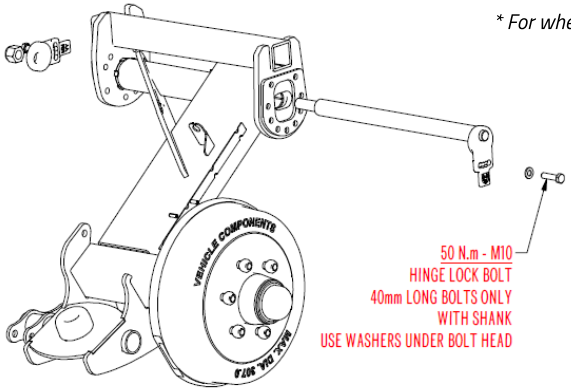

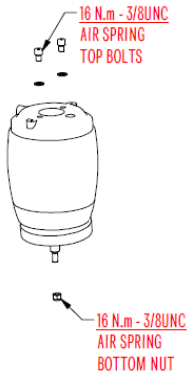

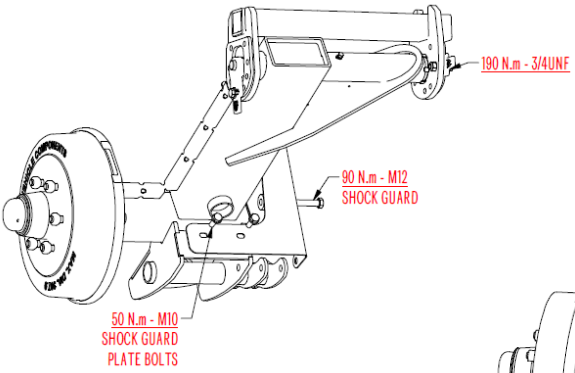

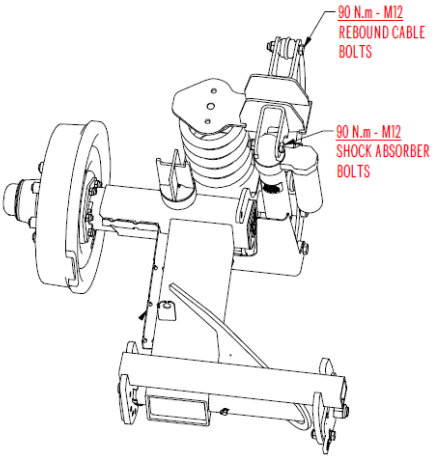

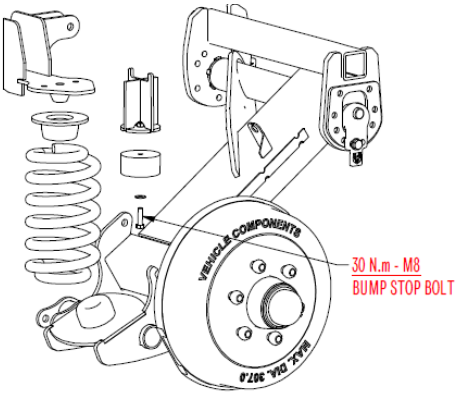

Cruisemaster™ highly recommends carrying a torque wrench when travelling remote.
(Not available through Cruisemaster™)

WHEEL ALIGNMENT

A wheel alignment should be conducted every 10,000 Km's, or if abnormal tyre wear is occurring. Visually inspect tyres for abnormal wear more regularly during off-road use.

Cruisemaster™ independent suspension toe and camber adjustment can be made with the cam mechanisms provided.

WHEEL ALIGNMENT PROCEDURE

1. **Preperation**
   Ensure the trailer is fully loaded and on a flat surface that will allow some tyre movement, move the trailer backwards and forwards to eliminate any twist in the wheels.

   Do not climb under a vehicle which is only supported by jacks, ensure suitably rated vehicle stands are used.

2. **Unlocking Adjusters**
   Loosen the hinge nut and remove the adjuster locking bolts.

3. **Measuring/Adjusting Camber**
   Measure vertically across the wheel rim or drum face to identify camber, all wheels should be set to 0° to -0.5° camber. We recommend the use of a "digital" spirit level for accurate results.

   Always adjust Camber first. Camber is adjusted via the cam on the inside of the arm.

   Rotate the adjuster as required to the nearest bolt hole. Use both coarse and fine adjustments to find the optimal position and use locking bolts to hold adjuster in place.

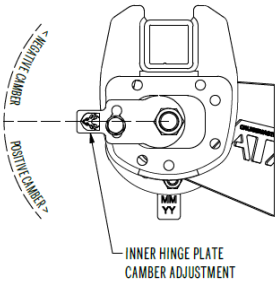

4. **Measuring/Adjusting Toe**
   Place a straight edge across the tyre face or drum face (avoiding inconsistencies from bulging lettering etc) then measure the distance from the straight edge to the chassis rail. This is your toe measurement.

   (Wheels on a single or tandem front axle should be adjusted to between 2mm toe-in and parallel. Wheels on tandem rear axle should measure parallel from the chassis rail.)

   Toe is adjusted via the cam on the outside of the arm. (Adjustment technique as per "adjusting camber").

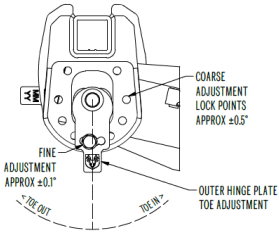

5. **Tighten and Torque**
   When adjustment is completed, tighten and torque adjustment locking bolts and hinge nut. (see torque requirements)

If the necessary alignment has not been achieved, repeat procedure until satisfied.

Watch how to complete a wheel alignment on YouTube: **CruisemasterClass - Ep 5**

AIR CONTROL SYSTEMS

Choosing an air suspension allows you to adjust your suspension characteristics to suit the load being carried. This means you can get the perfect ride every time!

As well as offering superior ride qualities and protection for your caravan or trailer in transit it also offers great convenience when setting up camp. Air suspension allows you to adjust the pressures/heights of the caravan per side, eliminating the need for wheel chocks to get levelled out. Simply adjust the bags until level across the caravan/trailer and then adjust front to rear level via the jockey wheel/stand.

The design of the airbags used in conjunction with the control system allows for the bags to be fully deflated for storage without causing damage to the bags. This is perfect for getting extra clearance in the garage or improving access on the campsite.

A key advantage to the ATX system is its ability to be upgraded from coil spring to air bag at any time with minimal changes to the suspension assembly.

AIR CONTROL SYSTEMS FEATURES

Cruisemaster™ offers a range of Air Control Systems with differing levels of functionality.

To maintain the premium performance of the ATX system, entry level air control systems are unavailable for this suspension.

Cruisemaster™ air systems can be identified in the lower left of the control panel.

CRUISEMASTER AIR CONTROL KIT FEATURES	LEVEL 3	LEVEL 3W	LEVEL 4
Airbags	☑	☑	☑
Manual Inflation Points	-	☑	-
Standard 12V Compressor	-	-	-
Heavy Duty 12V Compressor	☑	☑	☑
Pre-Wired Control Panel	☑	☑	☑
Dual Analogue Pressure Gauge	-	-	-
Dual Digital Pressure Gauge	☑	☑	☑
Wireless Remote Control Activation	-	☑	-
Extended Reach Tyre Inflation Coil & Wand, Quick Connect Bulkhead Coupling	☑	☑	☑
Air Tank (11 litres, 3 port, drain tap)	☑	☑	☑
Electrically Activated Tank Drain Solenoid	-	☑	☑
LED Power Switch	☑	☑	☑
Auto Height Control Valves & Fittings (self levelling)	-	-	☑

SETTING RIDE HEIGHT

To achieve the best possible ride it is important to correctly set your suspension ride height. This allows for the correct amount of travel and for all components to be operating as designed.

As this system is designed to allow for differing loads the best way to measure and set ride height is as per below.

HEIGHT SETTING

Method

Measure the distance from lower eyelet to upper eyelet of the rebound cable mounts. (as shown)

A distance of **360mm** from eyelet to eyelet will give you the optimised ride height for the load being carried.

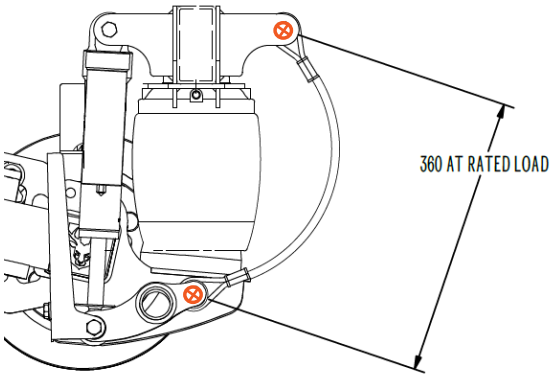

For easy confirmation of ride height we recommend the use of **"Cruisemaster™ Ride Height Indicators"** as a visual marker in the wheel arch to line up with the top of the tyre, this will eliminate the need to remeasure the spacing on every adjustment.

Available online www.cruisemaster.com.au/shop/

Watch how to set your ride height on YouTube: **CruisemasterClass - Ep 3**

OPERATING AT NON STANDARD HEIGHT

It is permissible to use the air springs to level the vehicle on site when stationary. This should be done with the brakes off but with the vehicle safely secured (eg: attached to the tow vehicle).

If it is required to raise the vehicle above the normal ride position then speed must be limited to 10kph and under.

CARAVAN/TRAILER STORAGE

If storing your vehicle for long periods the suspension can be set to below standard ride height for improved access/clearance. It is normal for air pressure to be lost during long term storage of your caravan causing the suspension height to lower.

AIR SYSTEM TROUBLE SHOOTING & MAINTENANCE

GENERAL SYSTEM CARE

It is recommended to periodically inspect your air suspension for operation, security, possible damage and component integrity. As with your vehicles tyres, an airbag is a pneumatic device that supports the vehicle's weight.

Air leaks may develop in the system and these are generally not covered under Warranty. If you encounter an air leak, contact Cruisemaster™ or the nearest National Service Network representative for assistance.

Though unlikely, it is possible that the airbag may be punctured as a result of: impact damage, improper inflation, improper installation or improper usage.

To reduce the risk of puncture, we strongly recommend to inspect and wash any accumulated sand, gravel or other road debris from the airbags and surrounding components.

SPARES

A full range of spare components are available from Cruisemaster™. We recommend carrying an Air System Emergency Repair Kit available online at www.cruisemaster.com.au/shop/

JACKING

If it is necessary to raise the vehicle, first release the air pressure from the springs.
Re-inflate after the vehicle has been lowered to the ground.

SYSTEM SUPPLY VOLTAGE

It is recommended to always maintain system voltage above 12.0volts.

System operation will be adversely effected by low voltage, causing the compressor to run longer and increase the time for each height adjustment. At low voltage the power supply will shut down disabling all system functionality.

OPERATING WITH LOSS OF AIR

In the event of air loss it is possible to run the vehicle on the bump stops.
Extreme care and slow speeds are required if running with airbags deflated.

If operating with loss of air, especially in off-road conditions. This can cause damage to air springs and the A-frame mounting brackets.

It may be advisable in these circumstances to lower tyre pressures to provide additional cushioning to road bumps.

MAXIMUM PRESSURE

Under no circumstances should the operating pressure be set above 100psi.
Standard operating pressure is between 50-90psi depending on load.

LOSS OF PRESSURE

It is considered normal for air springs to loose some air pressure over time. Due to the nature of the airbag material, the rate of loss can vary across the group of airbags.

During regular operation, a system air leak could occur even after many years of leak free service. A system air leak will cause increased frequency and/or run time of the air compressor.

Normal pressure loss should not exceed 3-4psi per week when the air springs are inflated to 50psi.

Any system leaks must be rectified as they can cause excessive compressor usage, premature wear and possible over-heating; as well as overloading of jacks, jockey wheels and stands.

We recommend the use of Loctite 567 on all threaded joints. Tube ends must be cut square to avoid leaks.

IMPORTANT SAFETY INFORMATION:

- It is recommended that only a properly qualified person installs the product and carries out removal and refitting of any components.
- If removed, never inflate an airbag assembly unrestricted. Improper use or over inflation may cause property damage or severe personal injury.
- Never inflate the air springs beyond 100psi.
- Never cut, weld or modify the airbag or associated parts.
- Do not use aerosol tyre repair products in airbags. If there is a hole, the airbag must be replaced.
- Do not use a tyre patch of any kind on an airbag. If there is a hole, the airbag must be replaced.
- Never weld within sight of an un-protected airbag; they are severely affected by weld UV & heat.

DRUMS / HUBS - WHEEL MOUNTING & STUDS

DRUMS / HUBS

Cruisemaster™ offers a range of drum/hub options to suit most common wheel types. This not only includes a range of stud patterns but also the spigot size crucial to the correct mounting of wheels.

It is important to identify if the wheels and drums/hubs being used are designed for hub centric or stud centric mounting. This is vital in ensuring the wheel is correctly centred on the drum/hub. Failure to do so will result in excessive vibration which could potentially cause the wheel to become loose and/or studs to be sheared.

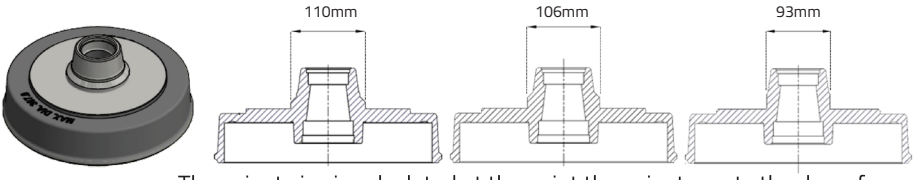

The spigot size is calculated at the point the spigot meets the drum face

Learn more about Wheel Mounting on YouTube: **CruisemasterClass - Ep 9**

WHEEL STUDS

Please ensure if changing wheel nuts that they are suitable for the length of stud. When using close ended nuts we recommend running the nut down the length of the stud prior to fitting the wheel to ensure they do not bottom out on the available stud length.

When mounting the wheel ensure nuts are tightened in a criss-cross pattern first by hand then tightened to the vehicle manufacturer's torque specifications.

If a torque requirement has not been provided please refer to the table opposite for the **maximum** torque guidelines.

IMPORTANT:

- Torque settings will need to be reduced depending on wheel rim design and type. Please consult the trailer manufacturer, wheel manufacturer or supplier for recommended specifications to suit the wheels supplied with your trailer.
- Maximum torque is based on 80% of stud yield strength.
- Wheel nuts should be tightened in a diagonal (criss-cross) sequence.
- Wheel nuts should be torqued using a calibrated torque wrench and checked at regular intervals as recommended in the maintenance schedule.

Stud Size	Grade	Maximum Stud Torque (N.m)
7/16" UNF	SAE Grade 8	120
1/2" UNF	SAE Grade 8	200
9/16" UNF	SAE Grade 8	270
5/8" UNF	SAE Grade 8	375
M12x1.5	Class 10.9	155
M14x1.5	Class 10.9	245

Source: Cold Forged Products

BRAKE OPTIONS

Cruisemaster™ ATX is available with either electric drum brakes or ventilated hydraulic disc brakes. One of the key features of this system is it comes standard with bowden cable mounts and can be easily retrofitted to disc brakes at any time giving you room to build on the platform.

ELECTRIC DRUM BRAKES

Cruisemaster™ ATX suspension can be supplied with Cruisemaster A/T or Dexter electric brakes. A range of Cruisemaster™ A/T spares are available directly from Cruisemaster or a number of caravan specialists around the country.

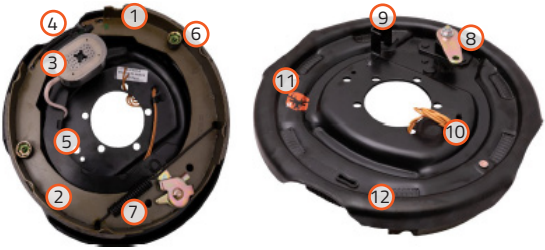

Components

1. Primary Shoe
2. Secondary Shoe
3. Magnet
4. Adjuster
5. Actuating Lever
6. Hold Down Spring
7. Retractor Spring
8. Handbrake Lever
9. Bowden Bracket
10. Activation Wires
11. Hand Indicator
12. Backing Plate

ELECTRIC DRUM BRAKES SET UP & MAINTENANCE

BRAKE MAINTENANCE SCHEDULE

	INITIAL CHECKS, at			SERVICE INTERVALS, every
	1st 100km	1st 300km	1st 1,000km	10,000km (or 12 monthly)
BRAKE ADJUSTMENT & CHECK		✓	✓	✓
BRAKE SERVICE				✓

BRAKE BOLTS & TORQUE

BRAKE	PATTERN	BOLT	NUT	TORQUE
12x2" CRUISEMASTER™	5 HOLES 98.5 PCD UNEQUAL AS PICTURED	3/8" UNF x 3/4" GRADE 5 Z/P	3/8" CONELOCK GRADE C Z/P	33 N.m

BRAKE ADJUSTMENT / CHECK
Brakes should be adjusted at intervals as per the "Brake Maintenance Schedule" outlined in this section, when the brake shoes and drums have "seated", or as use and performance requires.

The brakes should be adjusted in the following manner:

1. Jack up trailer and secure on adequate capacity jack stands. This system contains a built in Jacking point under the arm. Check that the wheel and drum rotate freely.

2. Remove the cover from the adjusting slot on the bottom of the brake backing plate.

3. With an adjusting tool, rotate the star wheel of the adjust assembly to expand the brake shoes. Adjust the brake shoes out until the pressure of the linings against the drum locks the wheel against movement by hand.

4. Rotate the star wheel in the opposite direction 7-10 turns until the wheel turns freely with a slight lining drag.

5. Replace the adjusting hole cover and lower the wheel to the ground.

6. Repeat the above procedure for all brakes.

IMPORTANT: *Never crawl under your trailer unless it is securely resting on properly placed jack stands.*

Watch how to adjust trailer brakes on YouTube: **CruisemasterClass - Ep 1**

BEDDING THE BRAKES (NEW BRAKES)
Before any synchronization adjustments are made, your trailer brakes should be burnished in by applying the brakes 20-30 times with approximately a 30 km/h decrease in speed, e.g. 60 km/h to 30 km/h. Allow ample time for brakes to cool between applications.

This allows the brake shoes and magnets to "wear-in" to the drum surfaces.

During this time, maintain a mid-low setting on your controller to avoid any shoe damage by rapid bedding.

There should be no sensation of the trailer 'jerking' or 'pushing' the tow vehicle. The trailer should not be braking the towing vehicle, as overheating of the brakes and premature wear may occur.

Stable brake temperature and torque may not be achieved until 500 - 1,000 Km's.

IMPORTANT: *To ensure safe brake performance and synchronisation, read the brake controller manufacturer's instructions completely before attempting any synchronisation procedure.*

IMPORTANT: *Before road testing make sure this it is safe to do so.*

USING A BRAKE CONTROLLER
Your trailer brakes are designed to work in synchronization with your tow vehicle brakes. Never use your tow vehicle or trailer brakes alone to stop the combined load. Electric brake controllers provide a modulation function that varies the voltage to the electric brakes with the pressure on the brake pedal or amount of deceleration of the tow vehicle.

Proper synchronization of tow vehicle to trailer braking can only be accomplished by road testing.

POWER REQUIREMENTS
Each brake will operate with a current draw of 3 amps, remembering a single axle set will draw 6 amps during service and a tandem will draw 12 amps. Wiring should be sized accordingly to ensure minimal voltage drop along the length of the trailer.

BRAKE SERVICE - CLEANING AND INSPECTION
Your trailer brakes must be inspected and serviced at yearly intervals or more often as use and performance requires. Magnets and shoes must be changed when they become worn or scored thereby preventing adequate vehicle braking.

Clean the backing plate, magnet arm, magnet and brake shoes. Make certain that all the parts removed are replaced in the same brake and drum assembly.

Inspect the magnet arm for any loose or worn parts. Check shoe return springs, hold down springs, and adjuster springs for stretch or deformation and replace if required.
Before reassembling, apply a light film of Silver Grade Anti-Seize or similar grease, or anti-seize compound on the brake anchor pin, the actuating arm bushing and pin, and the areas on the backing plate that are in contact with the brake shoes and magnet lever arm. Apply a light film of grease on the actuating block mounted on the actuating arm.

IMPORTANT: *Do not grease or oil on the brake linings, drums or magnets.*

BRAKE SERVICE - MAGNETS AND DRUMS
Electric brakes are equipped with high quality electromagnets that are designed to provide the proper input force and friction characteristics. Magnets should be inspected and replaced if worn unevenly or abnormally. A straightedge should be used to check wear.

Even if wear is normal as indicated by your straightedge, the magnets should be replaced if any part of the magnet coil has become visible through the friction material facing of the magnet. It is also recommended that the drum surface be refaced when replacing magnets. Magnets should also be replaced in pairs – both sides of an axle. Use only genuine replacement parts when replacing your magnets.

We recommend the 10" drum internal diameter be no more than 256.3mm and the 12" drum be no more than 307.0mm. If the internal diameter exceeds this dimension in either case the brake drum should be changed immediately to ensure safe brake operation.

BRAKE SERVICE - SHOES AND LININGS
A simple visual inspection of your brake linings will tell if they are usable. Replacement is necessary if the lining is worn (to within 1.6mm or less), contaminated with grease or oil, or abnormally scored or gouged.

Hairline heat cracks are normal in bonded linings and should not be a cause for concern. It is important to replace both shoes on each brake and both brakes of the same axle. This is necessary to retain the "balance" of your brakes.

PARK BRAKE OPERATION
When using the park brake facility, a cable is attached to the designated lever arm on the outside of the backing plate then to the base of the handbrake so to operate the brakes without need for constant electricity supply.

PARK BRAKE CABLE ADJUSTMENT
The cable should be adjusted in such a way that when the handbrake is disengaged there is some slack in the cable to ensure the brakes will not be dragging during normal operation.

It is recommended to adjust this so that at the highest engaged position of the handbrake the attachment lever is vertical. A further check should be made with the suspension at both ends of its travel to ensure the brakes do not operate in the bump and rebound conditions.

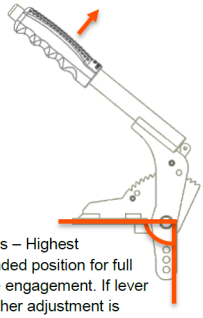

90 Degrees – Highest recommended position for full handbrake engagement. If lever travels further adjustment is required.

USE OF PARK BRAKE
Operation of the handbrake is the same as a standard mechanical vehicle handbrake. Simply pull the handle until the cable is tight and the handbrake locks in to the ratchet. In order to release the handbrake, pull the lever slightly and depress the handbrake button to make sure the pawl is free from the ratchet plate then return the lever to its resting position.

The following factors affect handbrake efficiency and should be considered when configuring your handbrake system.

- Wheel and tyre diameter
- Handbrake cable routing
- Brake condition or 'bedding in'
- Road surface
- Selected hole position in lever
- Pull force exerted on handbrake lever
- Brake type and size
- Angle of surface

ELECTRIC BRAKES - TROUBLE SHOOTING GUIDE
The following is a listing of the most common issues with electrical brakes, the causes and repair procedure.

If you believe these tasks to be outside of your skill level we recommend taking your trailer to a recognised repairer. A full members listing of the Cruisemaster™ National Service Network is available online at www.cruisemaster.com.au.

	ISSUE	POSSIBLE CAUSE	REPAIR PROCEDURE
COLD BRAKES	NO BRAKES	Open circuit	Check for broken wires, loose connections. improper grounding, faulty connector plug, between car and trailer, etc.
		Improperly wired or inoperative controller	Rewire Controller, check controller operation.
		Poor brake adjustment	Adjust brakes.
		Selective resistor defective	Check resistor for loose connections.
		Worn or defective magnet	Replace Magnet(s).
		Short circuit	Check electrical circuit.
	INTERMITTENT OR SURGING BRAKES	Out of round drums	Turn or replace drums.
		Inadequate trailer ground	Check for proper grounding. (Note: a ground through the trailer hitch is adequate).
		Broken magnet lead wires	Bench check magnets and replace if necessary.
		Loose wheel bearings	Check and adjust bearings.
	WEAK BRAKES	Loose connections	Check that all connections are clean and tight.
		Inadequate trailer ground	Check for proper grounding.
		Short circuit	Check electrical circuit.
		Selective resistor setting incorrect	Check for proper setting to avoid too much resistance.
		Worn or defective magnets	Replace magnets (magnet power gets better with wear).
		Poor brake adjustment	Adjust brakes.
		Bent Backing plate	Check backing plate flange. Correct if necessary.
		Contaminated lining	Check and replace badly contaminated linings.
		Excessive load on trailer	Check to be sure trailer is not under braked. Also be sure to have brakes on every axle.
		Using trailer brakes only	Use of trailer brakes can cause early fade or loss of friction due to excessive heat.
		Inadequate gauge of wire	See wiring recommendations.
	ISSUE	POSSIBLE CAUSE	REPAIR PROCEDURE
HOT BRAKES	GRABBING OR LOCKING BRAKES	Flanges improperly installed	Check flange location. Refer to axle manufacturer.
		Contaminated lining	Check and replace badly contaminated linings. Disconnect red wire on Controller.
		Controller not modulating	Disconnect red wire on Controller. Road test for braking modulation. If modulation is OK check the red wire. Bench test Controller and replace if necessary.
		No selective resistor	A selective resister is required when brakes have greater power than is necessary for the weight on the axle. Install selective resistor when necessary
		Weak or broken springs	Check for weak or broken springs, and replace is necessary.
	DRAGGING BRAKES	Brakes incorrectly adjusted	Check brake adjustment.
		Electrical defect in controller	Insufficient gap between controller contractor strip and coil may cause brakes to drag.
		Hydraulic defect in controller	Excessive residual pressure in tow car hydraulic system or a 'gummed up' controller cylinder may cause the controller to be help on slightly.
		Flanges improperly installed	Check flange location. Refer to axle manufacturer.
		Badly corroded brake assembly	Check brake assemblies for corrosion. Check to be sure magnet levers operate freely. Clean and lubricate brake assemblies.
		Weak or broken springs	Check for weak or broken springs, and replace is necessary.
	NOISY BRAKES	Lining excessively worn	Check and replace if necessary.
		Weak or broken springs	Check for weak or broken springs, replace if necessary.
		Range improperly located, bent backing plates	Check and repair if necessary.
		Contaminated lining	Check and replace badly contaminated linings.
		Improper bearing adjustment	Check and adjust bearings. Check for worn or damaged bearings, replace if necessary.
		Brakes incorrectly adjusted	Check brake adjustment.

VENTILATED HYDRAULIC DISC BRAKES

Cruisemaster™ offer a premium 12" electrically activated hydraulic disc brake with floating caliper and ventilated rotor.

Cruisemaster™ disc brakes are a retrofittable addition to this suspension system.

There are a number of reasons why quality disc brakes are superior to drums:

- Better cooling - less likely to overheat and fade
- Less susceptible to contamination from mud and water
- Fewer moving parts
- Less maintenance
- Lighter than drum brakes
- More pad-to-rotor contact area

MAINTENANCE

- Check condition of brake lines & hoses and check for signs of leaks on calipers and connection points.
- Check tightness of brake mounting bolts.
- Check condition of brake pads and replace if necessary.
- If replacing brake pads, clean mounting bolt threads, apply high strength Loctite on threads prior to reassembly and torque to **75Nm**.
- Check condition of disc rotor surfaces. If machining of the disc rotor is required, machine equal amounts off either side. The minimum disc rotor thickness is **20.7mm** (pictured).
- If caliper was fitted with lock wire, insert new wire through holes in bolt heads and twist. Ensure wire wrap clockwise around bolts to resist movement in the loosening direction, as pictured below.

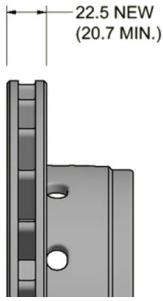

HYDRAULIC DISC BRAKES - TROUBLE SHOOTING GUIDE

The following is a listing of the most common issues with electrical brakes, the causes and repair procedure.

If you believe these tasks to be outside of your skill level we recommend taking your trailer to a recognised repairer. A full members listing of the Cruisemaster™ National Service Network is available online at www.cruisemaster.com.au.

ISSUE	CAUSE
EXCESSIVE SURGE ACTUATOR MOVEMENT OR SLOW RESPONSE (DELAY) FROM ELECTRIC/HYDRAULIC ACTUATOR	Air in hydraulic system
	Hose swelling / deteriorated flex hoses
	Fluid boil
	Badly worn pads
	Uneven pad wear
	Old or contaminated brake fluid
	Faulty master cylinder
	Master cylinder mounting loose
	Clogged reservoir cap vent hole
	Soft or swollen caliper seals
FRONT OR REAR AXLE BRAKES LOCKING PREMATURELY FRONT OR REAR AXLE BRAKES LOCKING PREMATURELY	Too much front or rear brake bias
	Excessive wear or failure in opposite system
	Worn tires
	Tire pressure too high
	Defective master cyclinder
	Defective caliper
ONE BRAKE LOCKING / TRAILER PULLS TO ONE SIDE	Caliper piston seizing
	Defective, damaged, or oil-contaminated brake pad on one side
	Defective Ccaliper
	Scored or out-of-round rotor
	Bad caliper mount
	Loose caliper mount
	Mismatched rotors and pads
	Incorrect tire pressures
	Bad axle-end alignment
	Mismatched tires / load
	Damaged or crimped brake line / hose
	Loose suspension parts
	Loose caliper mounting bolts
	Incorrect wheel bearing adjustment
VIBRATING TRAILER WHILE STOPPED	Excessive rotor run out or thickness variation
	Wheel bearing damaged, worn, or out of adjustment
	Cracked rotor
	Bent axle
	Caliper not sliding properly
NO BRAKES	Air in hydraulic system
	Leak in hydraulic system
	Tapered pad wear
	Lack of fluid in reservoir
BRAKES GRAB	Contaminated pad linings
	Brakes wet
BRAKES NOT RELEASING / BRAKE DRAG	Contaminated pad linings
	Brakes wet
BRAKES SQUEAL	Worn pads
	Brakes wet
	Glazed or contaminated pads
	Dirty or scored rotor
	Bent caliper bracket
	Taper wear on pads
RAPID PAD WEAR	Brakes not releasing
	Bad surface finish on rotor
	Pads too soft
	Pad fade (inadequate cooling)
	Cracked / damaged / contaminated rotor

SERVICE LOG BOOK

Initial Service	500 - 1,000km
2nd Service	10,000km
Ongoing servicing	10,000km intervals

NOTE: If your suspension is going off-road, or is experiencing rough terrain we strongly recommend that your suspension be serviced at intervals of 5,000km as a minimum.

Failure to properly maintain your suspension may void any manufacturer's warranty.

Where possible we recommend bringing your caravan or trailer to the Cruisemaster™ Towing Performance Centre in Brisbane for servicing and repairs.
07 3624 3800 (Option 2) www.towingperformance.com.au

Date: ..... Km: ..... Service Agent:	Date: ..... Km: ..... Service Agent:	Date: ..... Km: ..... Service Agent: ....
Date: ..... Km: ..... Service Agent:	Date: ..... Km: ..... Service Agent:	Date: ..... Km: ..... Service Agent: ....
Date: ..... Km: ..... Service Agent:	Date: ..... Km: ..... Service Agent:	Date: ..... Km: ..... Service Agent: ....

Date: ..... Km: ..... Service Agent:	Date: ..... Km: ..... Service Agent:	Date: ..... Km: ..... Service Agent: ....
Date: ..... Km: ..... Service Agent:	Date: ..... Km: ..... Service Agent:	Date: ..... Km: ..... Service Agent: ....

CRUISE MASTER™ NATIONAL SERVICE NETWORK

Need to find a quality service agent near you? Check out our Cruisemaster™ National Service Network Online.

www.cruisemaster.com.au/national-service-netowrk/

NOTES

.....

.....

.....

.....

.....

All information provided in this user guide is copyright of Cruisemaster Australia Pty Ltd and must not be copied in part or full without prior written permission from Cruisemaster Australia Pty Ltd.

TOWING PERFORMANCE CENTRE

CRUISEMASTER™ 4X4 FITOUTS / CARAVAN SERVICES

GEEBUNG, BRISBANE 07 3624 3800 (OPTION 2) TOWINGPERFORMANCE.COM.AU

FULL WEIGHT ASSESSMENTS
4X4 FITOUTS & ACCESSORIES
CARAVAN SERVICING
UNDERBODY RETROFITS & REPAIRS

THE EXPERTS IN THE COMPLETE TOWING EXPERIENCE!

CRUISE MASTER™ NATIONAL SERVICE NETWORK

CRUISEMASTER.COM.AU/NATIONAL-SERVICE-NETWORK/

APPROVED SERVICE AGENTS NATION WIDE!

This producty comes standard with a 3 year warranty. a complimentary 2 year warranty extension is available for this product.

Visit the Cruisemaster website for a full list of Terms & Conditions.

To Claim the full 5 years of warranty register this product online; *www.cruisemaster.com.au/warranty-policy/*

5 YEAR CRUISEMASTER™ WARRANTY

3 YRS STD + 2 YRS FREE ONLINE EXTENSION - T&C'S APPLY

ENGINEERED TESTED BUILT

85-ATX-USERGUIDE-REV.2